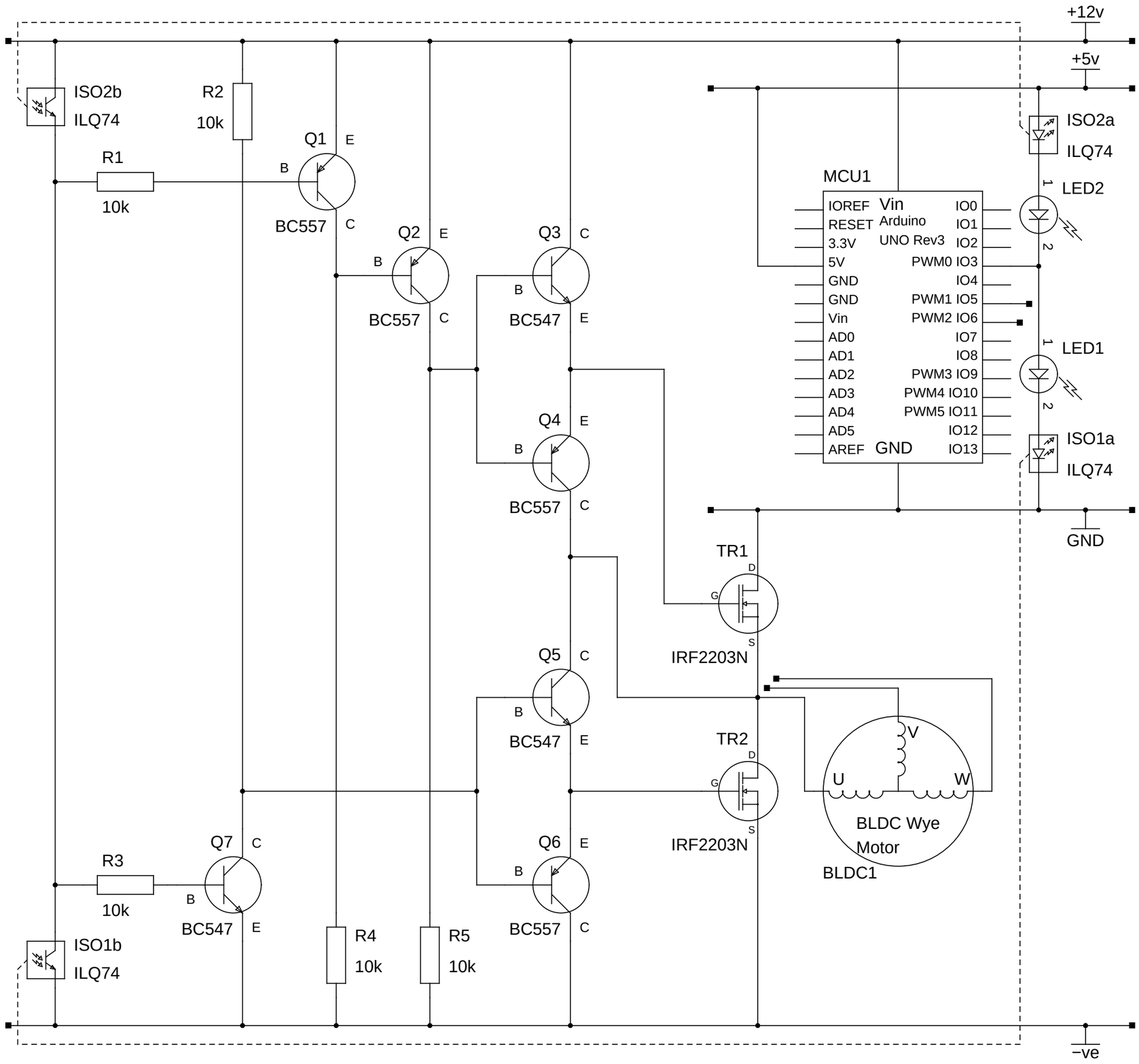

TITLE: Class D PushPull Test 2 AUTHOR: Graham North CREATED: 16−December−2013 NOTES: ps2pdf −sPAPERSIZE=a3