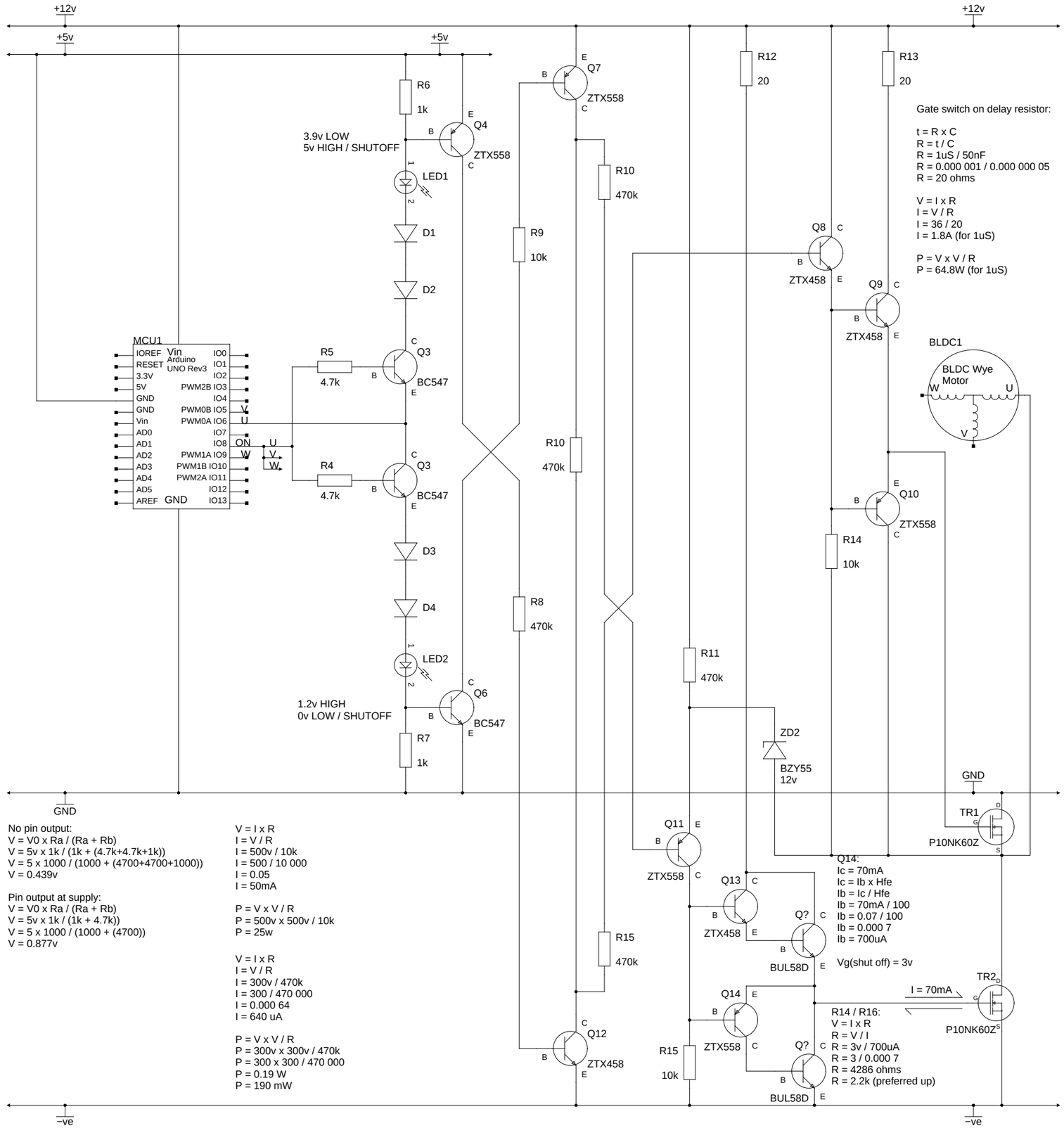

ZTX458 / ZTX558

Vcbo = 400V

Ic = 300mA (200mA ZTX558)
Vebo = 5V
P = 1W

(ZTX558)
Ton = 95nS
Toff = 1.6uS

Hfe = 100 (300 MAX)
Vg(threshold for Ic=1mA) = 0.6V

Gate switch on delay resistor:

t = R x C
R = t / C
R = 1uS / 50nF
R = 0.000 001 / 0.000 000 05
R = 20 ohms

V = I x R
I = V / R
I = 36 / 20
I = 1.8A (for 1uS)

P = V x V / R
P = 64.8W (for 1uS)

P10NK60Z

Qg = 70nC MAX
Cg = 1.37nF

Gate current:

Q=I x t
I = Q / t
I = 70nC / 1uS
I = 0.000 000 070 / 0.000 001
I = 0.07A
I = 70mA

Vg(threshold) = 3v MIN / 4.5v MAX
V5 (for Id = 10A) = 5.5v MIN
Vgs = +/−30v MAX

Pmax = 115W
Imax = 10A (25C)
Vds = 600V

V(TR2 gate) = 12v

V = I x R
I(R16) = 12v / 2.2k
I(R16) = 0.055
I(R16) = 55mA

P(R16) = V x V / R
P(R16) = 12v x 12v / 2.2k
P(R16) = 12 x 12 / 2200
P(R16) = 0.065W
P(R16) = 65mW

R11:
I = I(R16) + Ib(Q13)
I = 55mA + 700uA
I = 0.055 + 0.000 7
I = 0.055 7
I = 56mA

Vcc = +12v
Vbatt = −300v

V = Vcc − Vbatt − V(R16)
V = 12v − (−300v) − 12v
V = 12 + 300 − 12
V = 300v

V = I x R
R = V / I
R = 300v / 56mA
R = 5357 ohms
R = 4.7k (preferred)

P = V x I
P = 300v x 56mA
P = 16.8W (for 1uS)

No pin output:
V = V0 x Ra / (Ra + Rb)
V = 5v x 1k / (1k + (4.7k+4.7k+1k))
V = 5 x 1000 / (1000 + (4700+4700+1000))
V = 0.439v

Pin output at supply:
V = V0 x Ra / (Ra + Rb)
V = 5v x 1k / (1k + 4.7k))
V = 5 x 1000 / (1000 + (4700))
V = 0.877v

V = I x R
I = V / R
I = 500v / 10k
I = 500 / 10 000
I = 0.05
I = 50mA

P = V x V / R
P = 500v x 500v / 10k
P = 25w

V = I x R
I = V / R
I = 300v / 470k
I = 300 / 470 000
I = 0.000 64
I = 640 uA

P = V x V / R
P = 300v x 300v / 470k
P = 300 x 300 / 470 000
P = 0.19 W
P = 190 mW

Q14:
Ic = 70mA
Ic = Ib x Hfe
Ib = Ic / Hfe
Ib = 70mA / 100
Ib = 0.07 / 100
Ib = 0.000 7
Ib = 700uA

Vg(shut off) = 3v

R14 / R16:
V = I x R
R = V / I
R = 3v / 700uA
R = 3 / 0.000 7
R = 4286 ohms
R = 2.2k (preferred up)

TITLE: Class D PushPull Test 10 (Direct Signalling) AUTHOR: Graham North CREATED: 29−March−2014 NOTES: ps2pdf −sPAPERSIZE=a3