BUL58D (NPN):
Gain: 38
Power: 85W
Current: 8A / 16A peak

Assume the battery is 400v
IGBT gate voltage is 20v.
We want to discharge at 15A.

So to switch on BUL58D we need:

Ib(TR6) = Ic / hfe
Ib(TR6) = 15 / 38
Ib(TR6) = 0.395A
Ib(TR6) = 395mA

Base switch off resistor is 10k @ 20v

I(R8) = V / R(R8)
I(R8) = 20 / 10000
I(R8) = 0.002A
I(R8) = 2mA

Add to the 395mA is 397mA so say 400mA

KSP94 (PNP):
Power: 625mW
Gain: 100
Current: 300mA

Pass 400mA until the gate is discharged
which is < 1uS

So KSP94 base current is:

Ib(TR5) = Ic / hfe
Ib(TR5) = 0.4 / 100
Ib(TR5) = 0.004
Ib(TR5) = 4mA

So to switch on TR5 we need 4mA at 20v
(gate fully charged)

R6 = V / I
R6 = 20 / 0.004
R6 = 5000ohms
R6 = 5k

Power is:

P(R6) = V x I
P(R6) = 20 x 0.004
P(R6) = 0.08W
P(R6) = 8mW

Standard resistor is 1/8W (125mW)
so no problem there.

This circuit is working close to the
maximum speeds for these components.

The speed of this is 1uS switching
so is capable of a PWM cycle of 500kHz.

Most motor controllers operate at
frequencies at or just beyond audio
so around 10k − 50k, which means
this will have no problem.

Current passing when almost discharged (0.7v):

I = V / R
I = 0.7 / 5000
I = 0.00014A
I = 140uA

Ic(TR5) = Ib x hfe
Ic(TR5) = 0.00014 x 100
Ic(TR5) = 0.014A

Ic(TR6) = Ib x hfe
Ic(TR6) = 0.014 x 38
Ic(TR6) = 0.532

So gate discharge current is 532mA @ 0.7v

"Resistance" of TR6 at 20v/15A is:

R = V / I
R = 20 / 15
R = 1.3 ohms

"Resistance" of TR6 at 0.7v/532mA is:

R = V / I
R = 0.7 / 0.532
R = 1.32 ohms

R = R6 / (hfe(TR5) x hfe (TR6))
R = 5000 / (100 * 38)
R = 1.32 ohms

Capacitance of the gate is 50nF
All switching times are with gate resistor
of 1.1ohm so we are pretty close to max.
On the charging side

ZTX658 (NPN):
Gain: 50
Power: 1W
Current: 0.5A

Pass 400mA into TR4 until the gate is charged
which is < 1uS

So ZTX658 base current is:

Ib(TR3) = Ic / hfe
Ib(TR3) = 0.4 / 50
Ib(TR3) = 0.008
Ib(TR3) = 8mA

We also need to add the current drained by R6
which is 4mA at 20v.

So total current is 12mA

So to switch on TR3 we need 8mA
and the voltage difference is
400(battery) + 15(logic) − 20v (gate)

R4 = V / I
R4 = (400 + 15 − 20) / (0.008 + 0.004)
R4 = 395 / 0.012
R4 = 32916.67ohms
R4 = 33k preferred

P(R4) = V x I
P(R4) = (400 + 15 − 20) * (0.008 + 0.004)
P(R4) = 395 x 0.012
P(R4) = 4.74W, so make them 5W types

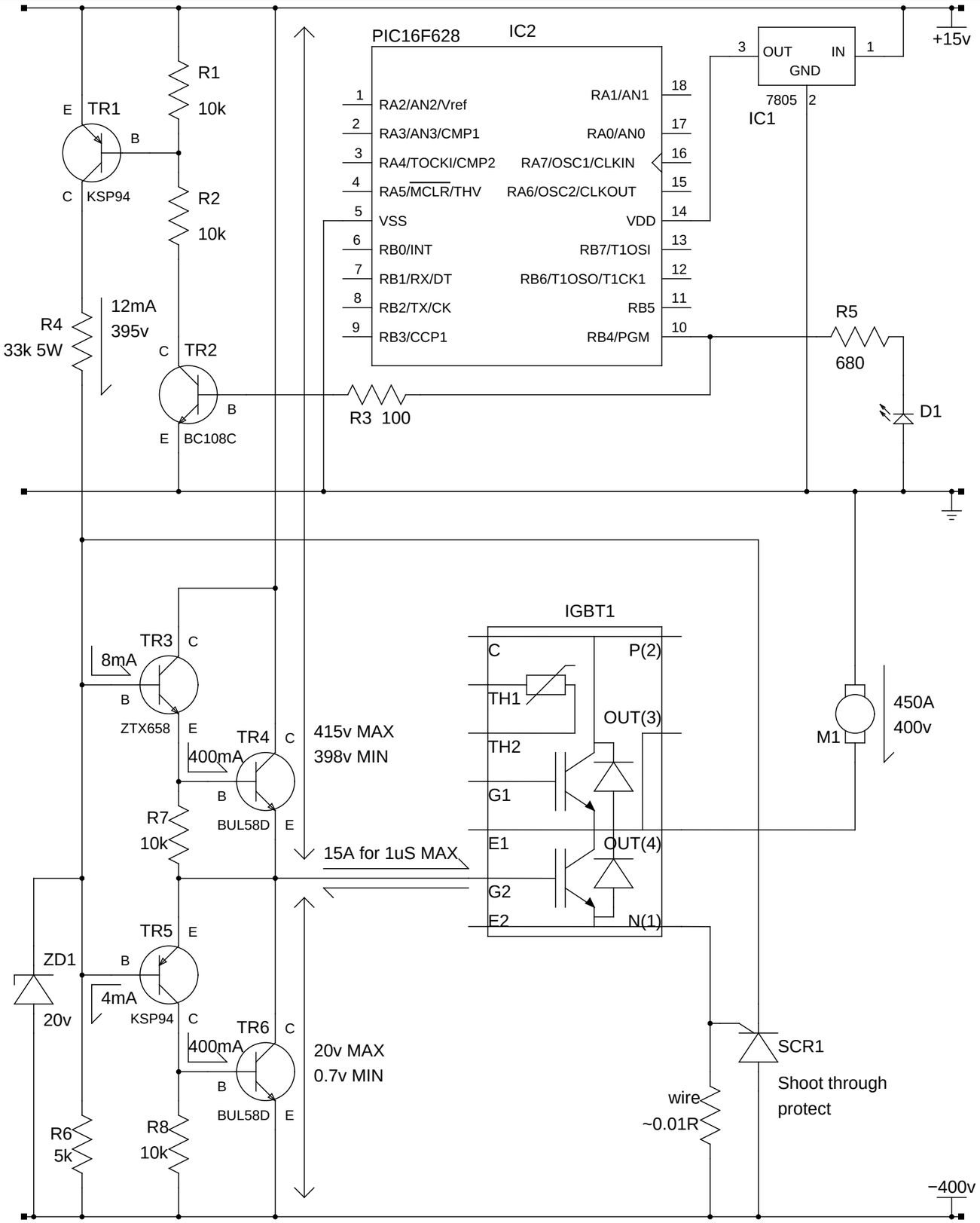

TITLE: BLDC Controller Direct Test
AUTHOR: Graham North
NOTES: ps2pdf −sPAPERSIZE=a3